ALUMINUM **MANHOLE RING AND COVER** **MH–550–31 FROST PROOF AL**

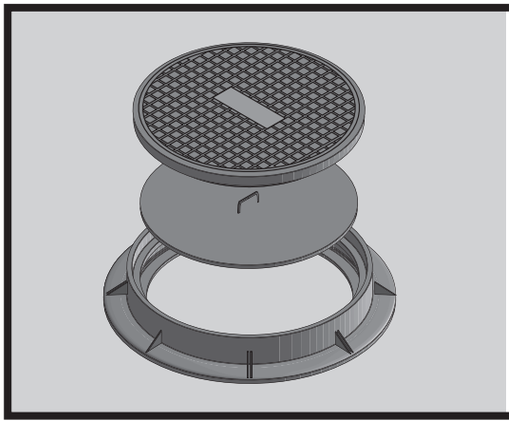

MH55031ALFP

APPROXIMATE WEIGHT

COVER	**105 lb**
RING	**87 lb**
INNER LID	**24 lb**

H-20 RATED

NOTES:
NAMEPLATES—OPTIONAL
AVAILABLE WITH BOLT DOWN & GASKET

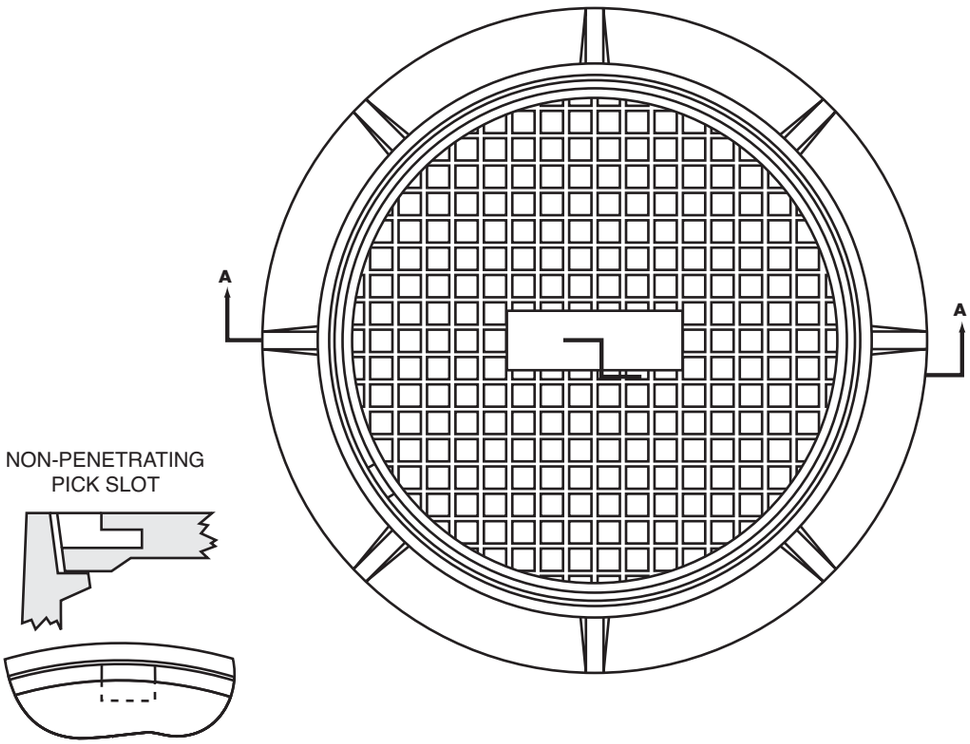

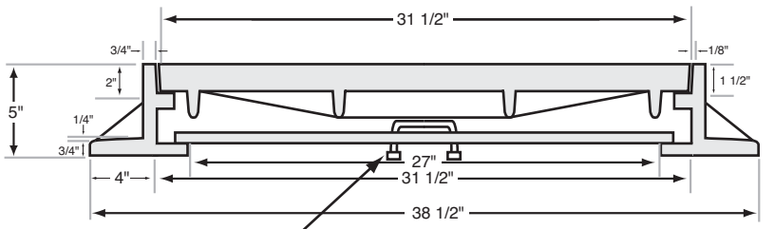

SECTION A–A

CASTINGS INC. 860 4TH AVE. • P.O. BOX 669 • GRAND JCT, CO 81502 • 970.243.2032 • FAX 970.242.4962