129561 Section 3:Section 3 5/30/13 3:01 PM Page 8

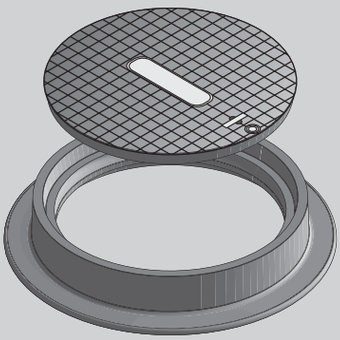

MH55032RAL

APPROXIMATE WEIGHT

COVER 86 lb
RING 73 lb

H-20 RATED

NOTE:
NAMEPLATES—OPTIONAL
MACHINED LID AND RING SEAT

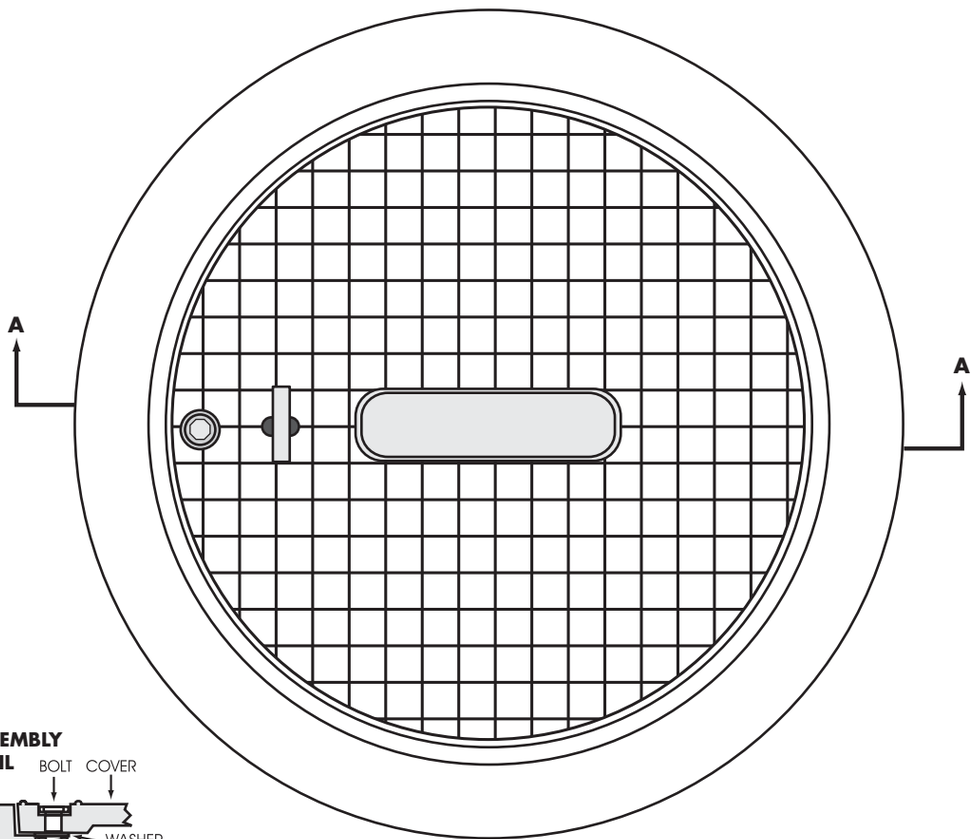

LOCK ASSEMBLY DETAIL

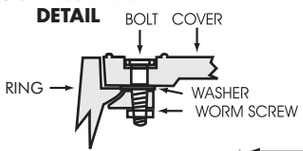

DROP HANDLE

SHOWN WITH OPTIONAL LOCK ASSEMBLY AND DROP HANDLE

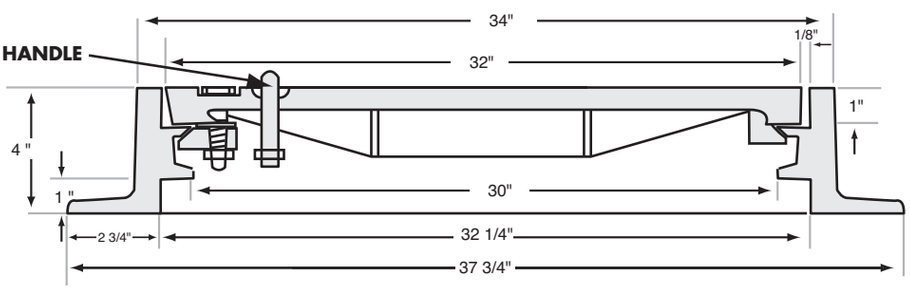

SECTION A–A