129561 Section 3:Section 3 5/30/13 3:01 PM Page 22

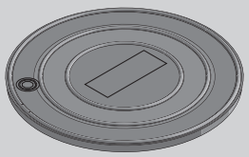

USFS24AL

APPROXIMATE WEIGHT

COVER 50 lb

H-20 RATED

NOTE:
AVAILABLE WITH BOLT DOWN & GASKET

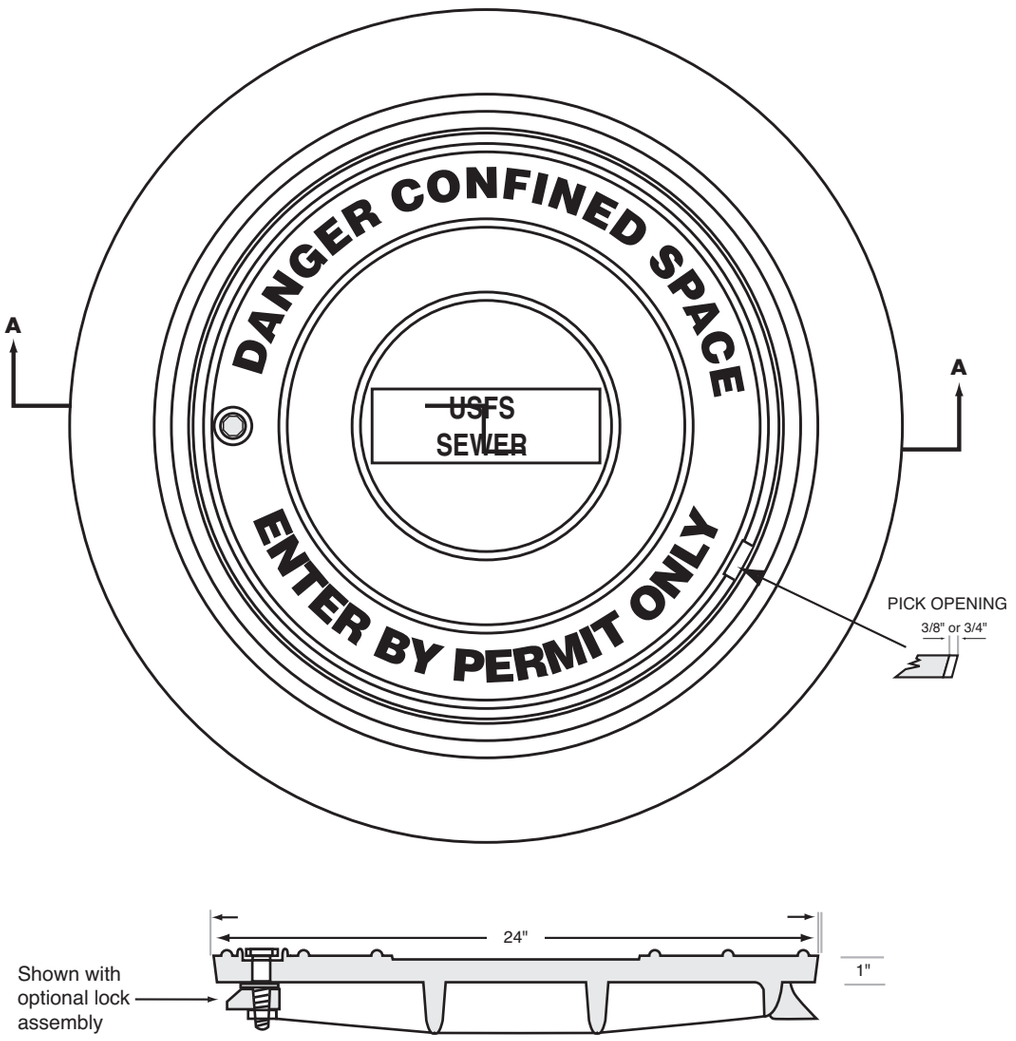

CASTINGS INC. 860 4TH AVE. • P.O. BOX 669 • GRAND JCT, CO 81502 • 970.243.2032 • FAX 970.242.4962