CAST IRON **METER LID** **W32TP RECESSED METER COVER LID C.I.**

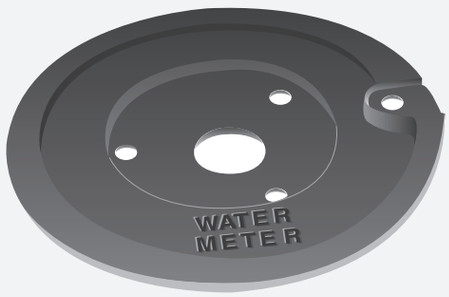

W32TPCI

APPROXIMATE WEIGHT—11 1/4 lb

NOTES:
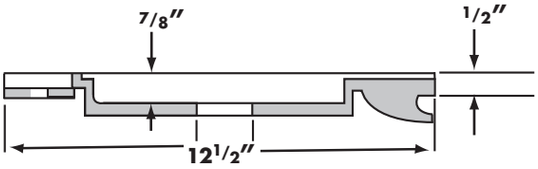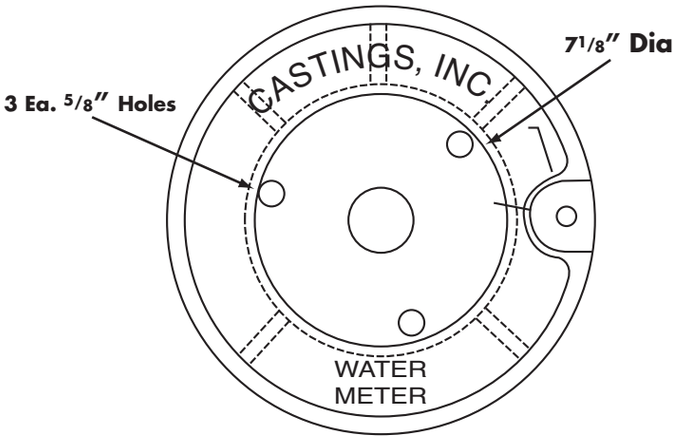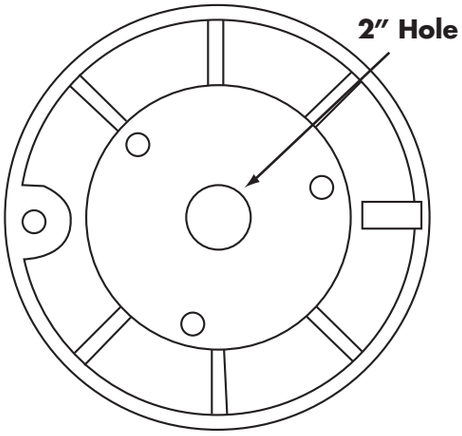
FINISH—BLACK BITUMINOUS PAINT