CAST IRON **VALVE BOX** **MODEL 4TCI16S**

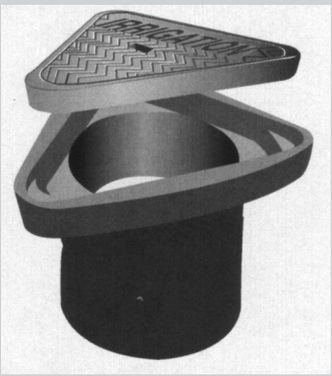

4TCI16S

APPROXIMATE WEIGHT 57 lbs.

LID 12 lb
BODY 45 lb
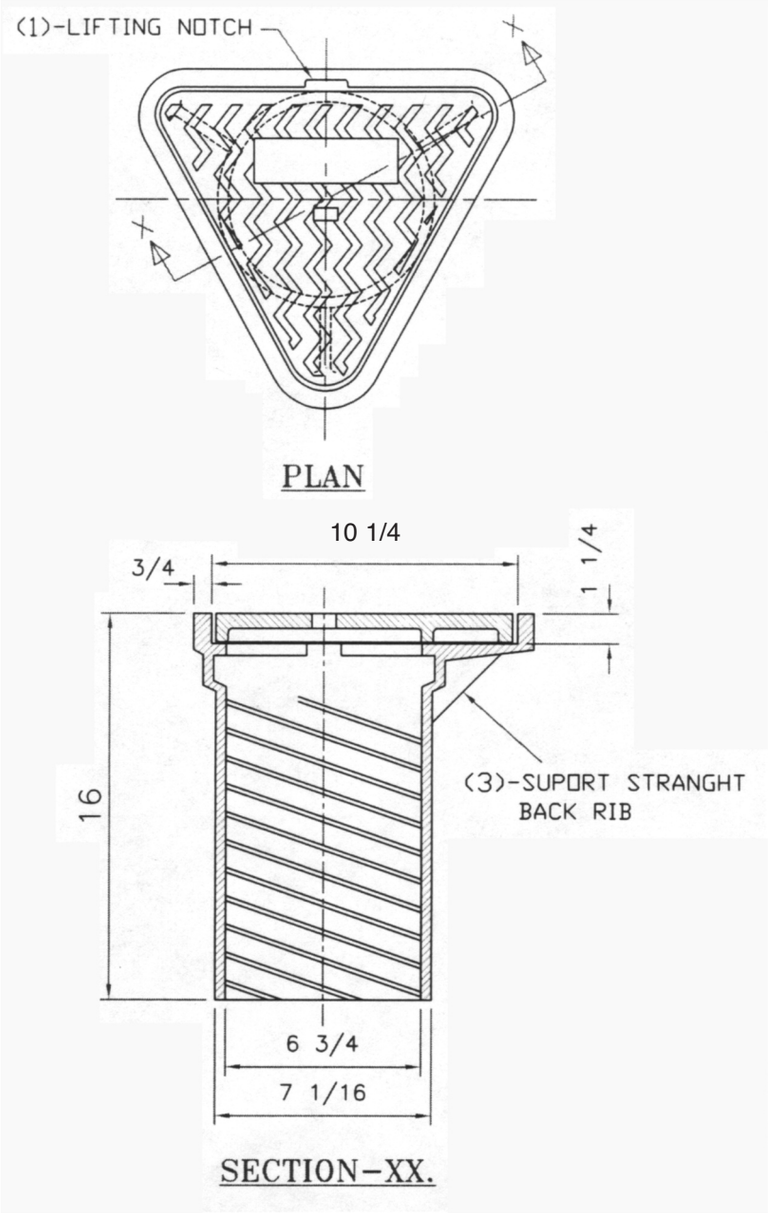
NOTES:
NAMEPLATES - CAST AS PER REQUIRED
FINISH - BLACK BITUMINOUS PAINT
MARKING - IT WILL BE CASTED AS RERQUIRED
MATERIAL - ASTM A 48 CLASS 35